KVFU 315 D1 EC

ÖSTBERG

- Wall fan with circular inlet connection.
- KV has a square mounting plate.
- Proven performance and reliability.
- Compact with high capacity and efficiency.
- Suitable for a wide variety of applications.
- Impeller with backward curved blades.
- The external rotor motor has maintenance-free sealed ball-bearings.
- Integrated motor protection.
- Junction box has enclosure class IP 54.
- Speed controlling can be done with the built-in potentiometer, 0-10 V alt. external control.
- Fan housing is manufactured from galvanized sheet steel.
- The fan is intended to be installed in a duct system, mounted on the inside wall.
- Easy installation in any position.
- Can be used in damp environments.

Accessories

- Speed controller MS EC
- Controller IQ-Reg EC
- Pressure regulator CALAIR-PR-230V
- Pressure regulator FKP-R
- MK 315
- BSV 315
- BSR 315
- RSK 315
- VK 400
- LDC 315

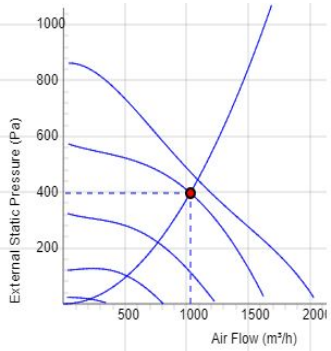

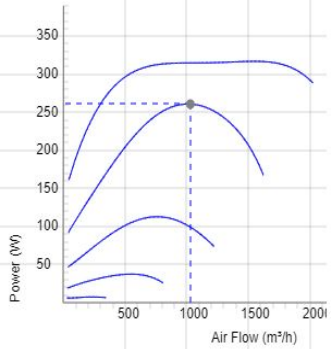

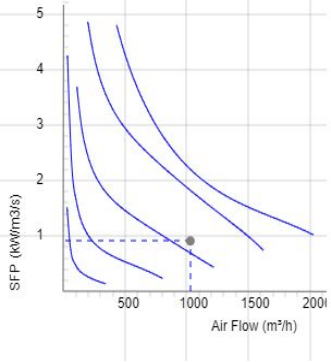

Voltage steps

1	2	3	4	5	6
10V	2V	4V	6V	8V	10V

TECHNICAL DATA	7100279 KVFU 315 D1 EC-y1
Voltage	230 V
Phase	1 ~
Frequency	50/60 Hz
Power	315 W
Current	2.5 A
Speed	2830 r.p.m.
Max. temperature of transported air	60 °C
Sound pressure level at 3 m	51 dB(A)
Weight	7.2 kg
Enclosure class	44 IP
Insulation class, motor	F
Capacitor	- µF
Duct connection	315 mm
Max. flow @ 0Pa	2062.8057758562 m³/h
Max. pressure	874 Pa
Voltage range	200-277 V

SOUND DATA	Flow (m³/h)	L_{wA} tot dB (A)	63Hz	125Hz	250Hz	500Hz	1KHz	2KHz	4KHz	8KHz
5. Surrounding Lw dB(A) 10V	1069	58	30	39	45	49	51	55	47	36
5. Outlet Lw dB(A) 10V	1069	77	42	50	60	69	71	73	66	61
5. Inlet Lw dB(A) 10V	1069	74	57	63	65	66	66	68	65	63
4. Inlet Lw dB(A) 6V	1033	72	55	61	63	65	64	65	63	61
3. Inlet Lw dB(A) 4V	770	65	50	56	58	57	58	59	56	52
2. Inlet Lw dB(A) 2V	508	56	42	47	50	49	49	48	47	33
1. Inlet Lw dB(A) 10V	191	40	29	34	35	32	30	23	32	18
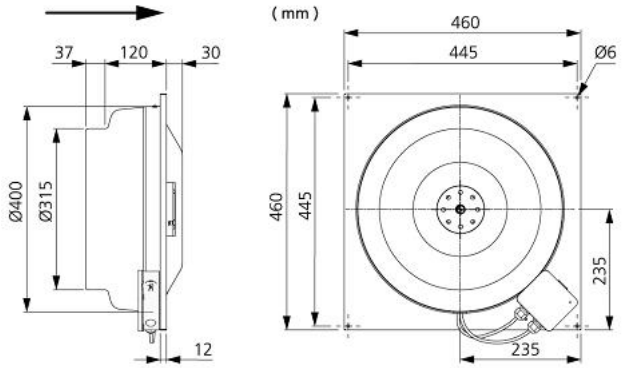
DIMENSIONS